AER090M1 - 007 / OMRON R88M-K1K520F

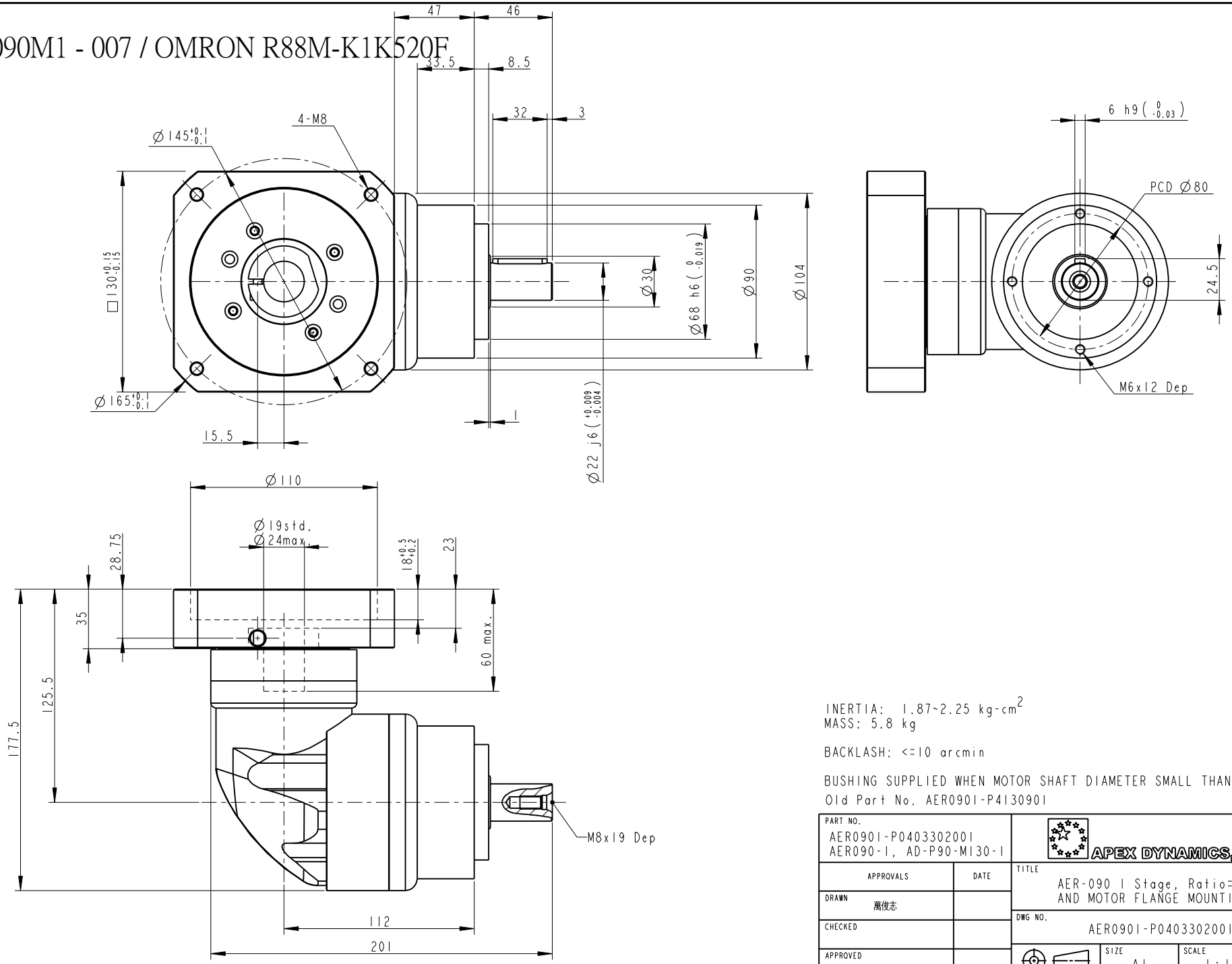

INERTIA: 1.87~2.25 kg-cm^2
MASS: 5.8 kg

BACKLASH: <=10 arcmin

BUSHING SUPPLIED WHEN MOTOR SHAFT DIAMETER SMALL THAN Ø24
Old Part No. AER0901-P4130901

PART NO. AER0901-P0403302001 AER090-1, AD-P90-M130-1		APEX DYNAMICS, INC.
APPROVALS	DATE	TITLE AER-090 1 Stage, Ratio=3~20 AND MOTOR FLANGE MOUNTING
DRAWN 萬俊志		DWG NO. AER0901-P0403302001
CHECKED		
APPROVED		SIZE A1 / SCALE 1:1 / REV 1.0